August 21, 2015

CITY OF PLANT CITY
Purchasing Department
(813) 659-4270

ADDENDUM 2

INVITATION FOR BIDS
BID NO. 15-98863-01

SNOWDEN PARK RENOVATIONS

***Bidders are required to acknowledge this addendum in their bid response.**

QUESTIONS/ANSWERS

1) 1 Will the GC have to apply and pay for EPC permitting?

ANSWER: ***NO, only the NPDES permit and the permit fee of $400.00.***

2) Is there a published budget for the project?

ANSWER: ***Yes, the City's budget for this project between General funds and Grant Funding is approximately $650K.***

3) Is there an irrigation plan, did not see that in the drawings?

ANSWER: ***NO There are specifications for an irrigation plan on sheet 11 of the Civil plans. An irrigation plan will need to be submitted for approval by the successful bidder. Each ball field and the surrounding park area shall be on separate zones.***

4) Is there more than one irrigation zone separating the irrigation of the ball fields from the rest of the park?

ANSWER: ***Yes Each baseball field will be on a separate zone and the areas outside of the ball fields will be on a separate zone. see sheet 11 of the Civil plans.***

5) Is the lump sum price based on quantities?

ANSWER: ***The bid will be a single lump sum bid for the entire project. The line items are not to be totaled or used to compute the project price, they are provided as a guide to assist the contractor in formulation of his bid.***

6) What is the scope of the directional drilling (Bid Item #3)?

ANSWER: ***The item was for placing conduits under the existing trail, other methods including concrete removal and replacement may be considered. If concrete removal is selected it will be from joint to joint.***

7) Will the GC be responsible for any impact or permitting fees?

ANSWER: ***NO only NPDES form and the permit fee of $400.00.*** http://www.dep.state.fl.us/water/stormwater/npdes/permits_forms.htm **62-621.300(4)(b)**

8) Are there an MBE goals associated with this project?

ANSWER: ***There are no goals set for the project but there will be HUD reporting on MBE utilization information required.***

9) Is e-verify required for this project?

ANSWER: ***Yes***

10) What is the contract deadline for project completion?

ANSWER: ***120 days from Notice to proceed.***

11) Will the City require security fencing for the project?

ANSWER: ***No it will be the contractors project and his/her responsibility to determine the level of security needed.***

12) Will the park be closed during the project phase and will the City consider making this a line item?

ANSWER: ***Yes the park will be closed, it will be the contractors project and his/her responsibility to determine the level of security needed.***

13) Will there be any other plans added to the project?

ANSWER: ***No.***

14) What is the gauge of the fencing required for the fenced area and the ball field back stops?

ANSWER: ***Build the fence according to plan sheet 10 in the Civil site plans. The fencing around the bottom is 6 gauge and the fencing around the fields is 6 gauge with a bottom rail.***

15) What is required for this project as far as the ball field dugouts are concerned?

ANSWER: ***The dugouts are part of the project and shall be built according to plan sheet 9 in the Civil site plans, the contractor will erect the dugouts not the City.The cost shall be included in the lump sum price***

16) What is the specification for the lavatory faucets? ANSWER: ***See the attached specification***

17) Is the cold water piping to be insulated?

ANSWER: ***See the architectural plans for the building, if silent use the applicable Building code.***

18) Where are the sewer and water tap locations?

ANSWER: ***See Sheet 7 of the Civil site plans, locations are approximate contractor to field locate. There are existing meters adjacent to the site.***

19) Are the sewer and water lines to be 5' from the building?

ANSWER: ***Follow building code and the contractor shall make the proper connections to the existing water and sewer lines in the field to provide service to the restroom building.***

20) W.C.O. to face outside of the building or inside because plans show both ways?

ANSWER: ***Wall cleanout to be inside the building, the only one shown outside the building was for the DF/HDF.***

21) Is this job bonded?

ANSWER: ***Yes see item 28 Payment and Performance Bond under BIDDER INSTRUCTIONS***

22) VE - Can CPVC be used in lieu of copper?

ANSWER: ***No must be per plans.***

23) VE – Can ARMA be used in lieu of fiberglass insulation? ***No, must be per plans.***

24) *The entire scope of this project requires many differing subcontracting trades. The successful bidder will likely play more of a role of Construction Manager.*
Section 3 – Scope of Work (near the bottom of page #1) requires that "the successful contractor shall show that he currently employs at least 50% of the workers to complete the project". Depending on the specialty of the successful bidder, it's reasonable to assume that very little of the work will be self-performed.
Question… Can this requirement simply be deleted?

ANSWER: ***This requirement was to find a General Contractor who has the resources on staff to handle the entire project. The requirement is deleted.***

25) Can the East 1/2 of Washington St. be used as a Lay Down / Staging area.

ANSWER: ***The southern half of the right of way may be used as measured from the existing edge of pavement. The church parking shall not be blocked or hindered. Another project is scheduled north of the Washington and may be under construction during the Snowden Park Construction.***

26) Irrigation

A) location of water supply-

ANSWER: ***See Sheet 7 of the Civil site plans, locations are approximate contractor to field locate. There are existing meters adjacent to the site.***

B) will City provide meter and tap and what size

ANSWER: ***See Sheet 7 of the Civil site plans, locations are approximate contractor to field locate. There are existing meters adjacent to the site.***

C) will specs be provided for controller and sprinkler heads

ANSWER: ***See Sheet 11 of the Civil site plans, The I-CORE model replaces the ICC a IC-600M is anticipated to be used with 6 to 42 station metal cabinet. Hunter I-20 or I-25 rotors. This configuration shall be included in the irrigation plan to be provided by the contractor.***

D). Basketball Court... Will Goal/Backstops be provided by City or Contractor... If by Contractor, will City provide specs.

ANSWER **:** ***The basketball goal posts, ground anchors, backboards and hoops are already purchased and awaiting installation of the base by the contractor. General Services has everything in storage. Once the court is completed and the ground anchors are installed by the contractor, the City will assemble and install the posts, backboards and goals. Specification for the basketball ground anchors on page 9 was taken from the manufacturer's instructions. (SEE ATTACHMENT 1)***

27) Contract language re Lump Sum pricing... Section 7 (page 4) of the construction contract provides for variable payment based on actual quantities... There was considerable discussion at the pre-bid about this contract being 1 Lump Sum with no quantity adjustment... Which is it?

ANSWER: ***The bid will be a single lump sum bid for the entire project. The line items are not to be totaled or used to compute the project price, they are provided as a guide to assist the contractor in formulation of his bid.***

28) I wanted to clarify that it appears this bid is only for the concrete pads for the bleachers and not the actual bleachers? Are the bleachers existing?

ANSWER***: The bleachers were removed by City forces and will be re-erected when the project is complete. The concrete pads are all the bidder will be doing for the bleachers.***

29) Need to know where Sewer and Water location is for this job?

ANSWER: ***See Sheet 7 of the Civil site plans, locations are approximate contractor to field locate. There are existing meters adjacent to the site. The water and sewer locations are shown on sheet 7 of the civil site plans by Bogg's Engineering.***

30) Will substitutions be allowed for the bathroom fixtures?

ANSWER: ***Not at this time.***

31) Grassing... Sheet #11 calls for "St. Augustine Bahia"... Is it Bahia or St. Augustine?

ANSWER: ***Tifway 419 (a certified hybrid Bermuda-type grass) on the playing surface of the fields as shown. Winter Rye shall be broadcast along with the Bermuda seed (or broadcast after sprigging) to develop a quick root system to help with erosion concerns on the unsodded areas. Substitute Bermuda sod for all areas where St. Augustine Bahia sod is specified.***

32) Do we have a specification for the basketball hoops and stand? One of the questions came up.

ANSWER: ***The basketball goal posts, ground anchors, backboards and hoops are already purchased and awaiting installation of the base by the contractor. General Services has everything in storage. Once the court is completed and the ground anchors are installed by the contractor, the City will assemble and install the posts, backboards and goals. Specification for the basketball ground anchors on page 9 was taken from the manufacturer's instructions. SEE ATTACHMENT 1***

33) Will the basketball backboard system be provided by the City? If not, please provide specifications.

ANSWER**:** ***The basketball goal posts, ground anchors, backboards and hoops are already purchased and awaiting installation of the base by the contractor. General Services has everything in storage. Once the court is completed and the ground anchors are installed by the contractor, the City will assemble and install the posts, backboards and goals. Specification for the basketball ground anchors on page 9 was taken from the manufacturer's instructions. SEE ATTACHMENT 1***

34) The drawings call for Una-clad metal roof system. Will be an allowed equivalent metal roof system from another manufacturer?

ANSWER: ***UNA-CLAD metal roof system shall be used.***

35) Air/vent block specification?

ANSWER: ***MASTER FLOW MODEL BVSII or other vent meeting the building code.***

36) Detail 4 sheet A-2 of restroom and pavilion building shows stucco on the exterior walls. The elevation shows them to be painted CMU walls. Will there be stucco or paint required on the exterior walls?

ANSWER: ***No stucco finish smooth block finish with 1 coat of primer and two coats of paint.***

37) Does the provided survey in the site plan set of drawings reflect the existing elevations of the field at this time?

ANSWER:***YES, except for erosion control measures have been recently been ADDED. The contractor shall make a field visit to confirm current conditions prior to bid submittal.***

38) Should the painting of the existing buildings be included in the bid?

ANSWER: ***No stucco finish smooth block finish with 1 coat of primer and two coats of***

BID DOCUMENT CHANGES

1. Sheet 5 of the plans is amended as follows and will be replaced prior to the START OF CONSTRUCTION.

   a) The notes in the upper left hand corner of the sheet will be **"deleted" in its entirety** which state **5' x 10' WIDE SIDEWALK TO BE REMOVED.**

   b) The notes regarding the dugouts will be "**amended to read**" **PROPOSED 20'X8' DUGOUTS BY THE CONTRACTOR (SEE SHEET 9 FOR DETAILS).**

   c) The note under **SITE DATA- 9**. Will be **"deleted" in its entirety.**

   d) **The LANDSCAPING AND IRRIGATION -5 "spelling correction" to read SPRINKLERS.**

   e) The note FOR BASKETBALL COURT STRIPING-SEE SHEET 10 is "**amended to read"** FOR **BASKETBALL COURT STRIPING-(SEE SHEET 9).**

2. Sheet 6 of the plans is amended as follows and will be replaced prior to the START OF CONSTRUCTION.

a) The pipe sizes in the upper left hand corner are to be "**labeled" 8**″ **PVC**.

3. **THE BID DUE DATE HAS BEEN CHANGED TO: NOT LATER THAN 2:00 PM, WEDNESDAY, SEPTEMBER 2, 2015**

All other terms and conditions of the original Invitation for Bids remain the same.

ATTACHMENT 1

Goalsetter®
Best in Basketball™

INSTALLATION AND OWNER'S INSTRUCTIONS

Signature Series

Internal Jack Adjustable Height Goal System

- MVP
- Captain

TABLE OF CONTENTS

Safety Instructions 2
Goal Specifications 3
Determine Installation Location 3
Ground Anchor Installation 4
Pole Assembly 5
Extension Arm Attachments 6
Backboard Attachment 7
Goal Alignment 8
Rim Attachment 9
Height Indicator Adjustment 10
Ready to Play 11
Warranties ..... Back Cover

PROUDLY MADE IN THE USA

800.362.4625
www.goalsetter.com

Safety Instructions

Owner must ensure that all installers and players know and comply with these rules for safe assembly, installation, operation and use of the system. Proper and complete assembly, use and supervision is essential for proper operation of the product and to reduce the risk of accident or injury. **DO NOT ATTEMPT TO ASSEMBLE AND INSTALL THIS PRODUCT WITHOUT FOLLOWING THE INSTRUCTIONS CAREFULLY.**

⚠ WARNING

1. Failure to follow these instructions may result in death, serious injury and/or property damage and will void the warranty. Do not install or use this product unless the instructions within this manual have been carefully read and understood.
2. Locate your goal away from potential dangers, including walls, trip hazards, high-traffic areas or where a vehicle might come into contact with goal post, backboard or rim.

   To avoid severe injury or death, do not locate goal under power lines that may come into contact with the goal as it is raised.
3. Two or three people in good physical condition and capable of lifting at least 90-100 lbs. (40-45 kg) each are recommended for safe installation and assembly.

- If using a ladder during assembly, use extreme caution. Follow all warnings and cautions on the ladder carefully.
- Installation and assembly of this product will require lifting and bending that may result in injury to anyone not accustomed to this type of activity.
- Before digging for the ground anchor, check for underground power, gas, telephone, water and other utility lines. Failure to do so could result in serious injury. See 811 One Call Warning box on this page for more information or call your local utility company.
- If an auger or post hole digger is used, be sure you read and follow all instructions, warnings and cautions for such equipment.
- Ensure there are no overhead power lines within a 20 ft. (7 m) radius of the goal location.
- Climate, corrosion or misuse could result in system failure.
- Keep organic material away from the pole base. Dirt, grass, litter etc. could cause corrosion or deterioration.
- Only use parts provided with your Goalsetter® basketball goal system or replacement parts provided by Goalsetter Systems, Inc. Use of other parts (a) may cause the goal system to fail, (b) could result in death, serious injury or property damage, and (c) will void the warranty.
- With rim set at 6'-0" playing height, the minimum operational height is 5'-4" (1.625 m) to the bottom of the backboard.
- **DO NOT CLIMB THE POLE OR HANG on the rim or any part of the goal system.** This includes the backboard, support braces and net. The product is not designed for such use and property damage or personal injuries such as cuts, broken bones, nerve, spinal cord or brain injury or death could occur.
- Use caution when performing dunking activities with this product.
- During play keep players' faces away from the backboard, rim and net or serious injury could result.
- Players must wear a mouth guard to avoid dental injuries.
- Do not wear jewelry (rings, watches, necklaces, etc.) or other loose objects that could become tangled in the net or injure another player.

⚠ WARNING

Before digging for the ground anchor, contact your local One-Call system (dial 811) in your area.

811 Know what's below. Call before you dig.

1-888-258-0808

Utility Markings

Color	Definition
Red	Electric
Yellow	Gas, Oil, Petroleum
Orange	Communication, Phone, TV
Blue	Potable Water, Irrigation
Green/Brown	Sewer
White	Proposed Dig

- Before each use, check the goal system for loose hardware, excessive wear and signs of corrosion. Repair the system before use.
- **NEVER** play on damaged equipment.
- When adjusting the height of the rim:
  - Keep hands and fingers away from moving parts.
  - DO NOT allow children to adjust the system height.
  - DO NOT OVERCRANK OR OVER-ADJUST the rim height above 10 ft. or below 6 ft.
- Check the goal system frequently for signs of corrosion. Remove surface rust and loose paint completely, and repaint with exterior enamel paint. If rust or corrosion has penetrated or pitted any components of the goal, DO NOT allow play and repair or replace parts immediately.
- DO NOT use the goal system to lift or hoist anything.
- Use caution when using this goal system. Most injuries are caused by misuse and/or not following these instructions.

IMPORTANT

Enclosed underneath the protective sheeting on your backboard is a warranty registration card. YOU MUST FILL OUT AND MAIL IN THIS CARD IN ORDER TO HAVE A VALID WARRANTY. You may also fill out a warranty registration online at www.goalsetter.com.

Retain this manual for future reference of operation, maintenance and parts information.

The information in this manual is based on the latest information available at the time of publication. Your goal may have product improvements and options not yet contained in this manual. Goalsetter Systems, Inc. reserves the right to make changes at any time without notice or obligation.

Contact the manufacturer if technical assistance is required.

Additional copies of these instructions are available from:

Goalsetter Systems, Inc.
1-800-362-GOAL (4625)
www.goalsetter.com

Goal Specifications

	MVP	Captain
Pole Size:	6”x6”	6”x6”
Backboard Size:	42”x72”	38”x60”
Weight w/Acrylic:	525 lbs.	510 lbs.
Weight w/Glass:	585 lbs.	560 lbs.
(A) Height Range:	6’-10’	6’-10’
(B) Extension Distance: at 10’	51”	51”
at 8’	54”	54”
at 6’	48”	48”
(C) Maximum Overhang:	79”	79”
(D) Distance Rim to Backboard:	25”	25”
(E) Distance Rim to Top of Goal:	33 ¾”	29 ¾”
(F) Crank Distance:	11 ½”	11 ½”
(G) Crank Height:	36 ½”	36 ½”
(H) Offset Height:	7’-0”	7’-0”
(I) Pole Height:	10’-5”	10’-5”
(J) Offset Distance:	21”	21”
(K) Crank Turn Radius	8”	8”

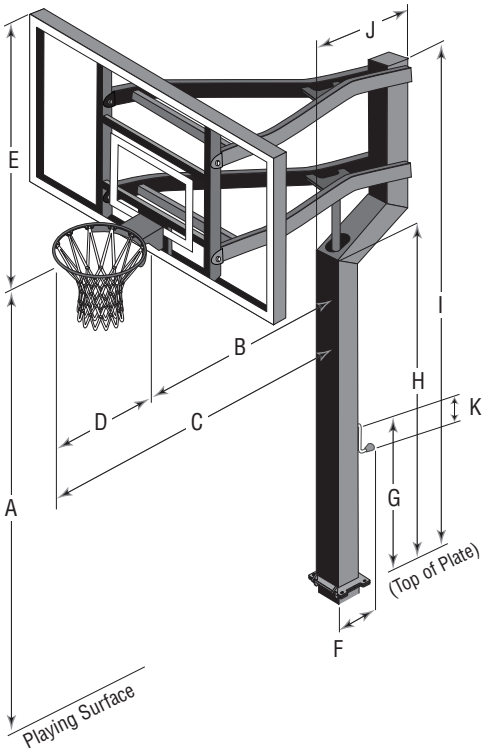

Determine Installation Location

Consider the following to determine where to install your Goalsetter® Basketball Goal:

- When extended, will backboard overhang obstruct driveway or other important space? Maximum overhang: 79” (2 m) from the front of the pole to the front of the rim.
- Is there room so vehicles backing out of driveway do not strike backboard or rim?
- Will court markings be used?
- How much playing surface is needed?
- How much playing surface will be under the backboard? (Having the edge of the playing surface directly underneath the backboard can result in trip hazards and unpredictable ball action following a shot. Try to have as much playing surface as possible behind the backboard.)
- Other functions of playing surface (driveway, playground, etc.)
- Will the goal be at least 20 ft. (7 m) from any overhead power lines? (No overhead power lines should be within a 20 ft. (7 m) radius of the goal.)
- Will the ground anchor for the goal avoid underground power, gas, telephone, water and other utility lines? (See 811 One Call Warning box on page 2 for more information or call your local utility company.)

Required Tools and Materials:

- Spade
- Shovel
- Tape Measure
- Level
- Hoe
- Water
- Rubber Mallet
- Steel Punch
- Stepladder
- Wheelbarrow
- Cement Trowel
- Stir Rod
- Auger/Post Hole Digger (optional)
- 10-14, 60 lb Bags of Dry Concrete Mix (or ¼-⅓ yard of ready mix concrete)
- ½” Drive Torque Wrench
- Phillips Screwdriver
- 9/16” & ¾” Wrenches and Sockets

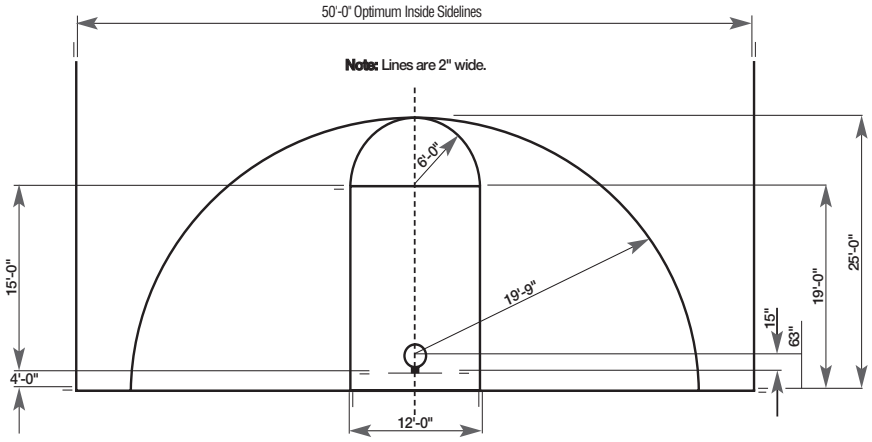

Court Markings
(Reference Only):

Regulation Court Lengths
High School: 84’
College & Professional: 94’

Ground Anchor Installation

Step 1: Locate and unpack a 6”ground anchor (G2660). Remove plastic plugs from bolt holes and ensure the threads are in good condition. **REPLACE THE PLUGS** – they will keep concrete and debris from the bolt holes during installation. Leave the hinge pin in place as well.

Step 2: Determine hole location. When installed, the edge of the ground anchor must be a minimum of 6” (15.2 cm) away from the playing surface. Follow One Call or your utility’s recommendations as to how close you may dig to a marked utility.

IMPORTANT

You **MUST** dig the anchor hole at least 48” (1.2 m) deep.

⚠ WARNING

Before digging for the ground anchor, check for underground power, gas, telephone, water and other utility lines. Failure to do so could result in serious injury. See 811 One Call Warning box on page 2 for more information or call your local utility company.

Step 3: Dig hole 48” to 50” (1.2 m – 1.3 m) deep and 18” (0.5 m) in diameter using a spade, shovel, auger or post hole digger.

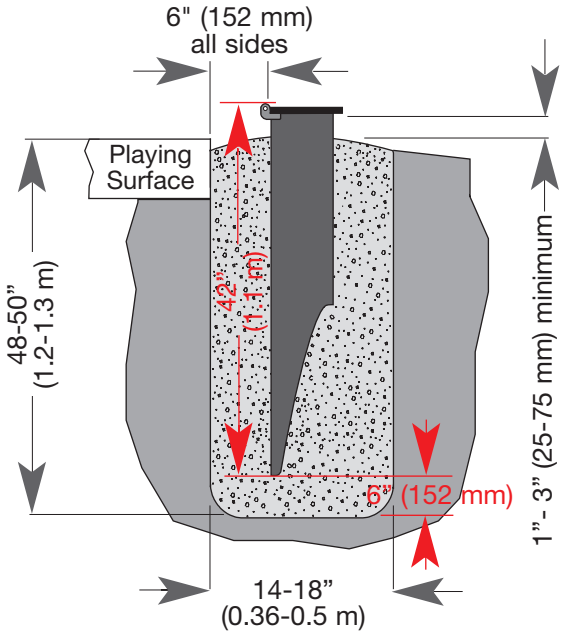

TIME OUT TIP: If you plan on mixing concrete in stages, work quickly to minimize time between batches.

Step 4: Mix concrete. Put cement in wheelbarrow. Add the amount of water recommended on the bag, and mix with hoe.

Step 5: Begin adding concrete into hole until concrete is approximately 28”- 30” (.7 m – .8 m) deep.

TIME OUT TIP: The arrow on the decal **MUST** be pointing toward the playing surface.

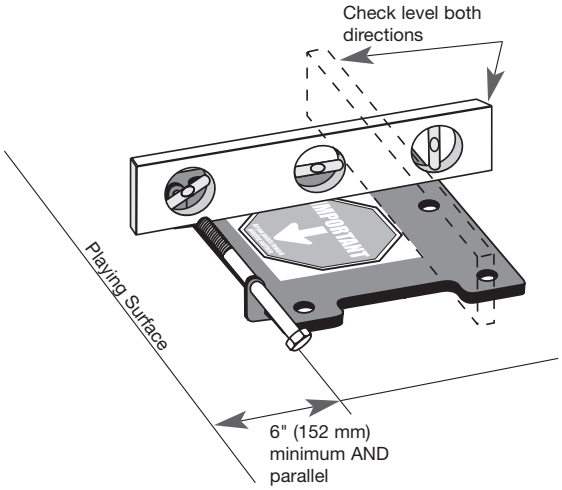

Step 6: Position 6” ground anchor (G2660) in center of hole with hinge side toward and parallel with playing surface. Using a level, ensure the anchor is level front-to-back and left-to-right. All edges of the ground anchor must be 6” (15.2 cm) away from all sides of hole and the top of the ground anchor within a range of 1”- 3” (25-75 mm) above the level of the playing surface.

TIME OUT TIP: As you add concrete, occasionally insert a stir rod (such as a broomstick) into three or four places in the concrete and plunge up and down to help eliminate air bubbles.

Step 7: Continue adding concrete until concrete is within 1”- 1.5” (25-38 mm) of anchor plate bottom, or level with the landscape – whichever comes first. Slope top of concrete away from pole with trowel to create a smooth surface.

IMPORTANT

- Periodically re-check the level of the anchor plate in both directions as you add more concrete.
- Slope the top of the concrete fill away from the ground anchor in all directions to shed moisture away.

TIME OUT TIP: If you must adjust the height, be sure to re-check level and that the anchor is parallel with playing surface!

Step 8: If needed, adjust anchor plate height. The top of the ground anchor should be within a range of 1”- 3” (25-75 mm) above playing surface. Be sure to re-check level.

Pole Assembly

IMPORTANT

- Allow 48 hours for concrete to cure before beginning.
- Check to see that no concrete or debris obstructs threads in ground anchor bolt holes by threading anchor bolts in and out.

Step 1: Remove five plastic plugs from threaded holes in ground anchor. Also remove hinge pin and hex nut and place near anchor plate. (These will be used in Step 3.)

TIME OUT TIP: To protect pole finish, place square packing pad (included in pole box) on the ground at the bottom of pole and at the "neck" where pole offset begins. Remove once pole is held by installation clip.

Step 2: Unpack pole and jack. The jack is already assembled inside the pole.

Step 3: Align pole hinge with anchor plate hinge, then insert hinge pin and hand tighten hex nut.

Step 4: Lift pole to approximately 30° and attach installation clip to ground anchor and pole to maintain the installation angle.

IMPORTANT

The installation clip **MUST** remain in place until pole is raised in Goal Alignment, page 8.

Step 5: Pull jack assembly out slightly, remove packing and protective materials from end of jack and reposition jack in pole so the connection pin for the jack handle is visible in the lower half of the pole opening. This indicates the jack assembly is properly seated.

WARNING

Two or three people in good physical condition and capable of lifting at least 90-100 lbs. (40-45 kg) each are recommended for safe installation and assembly.

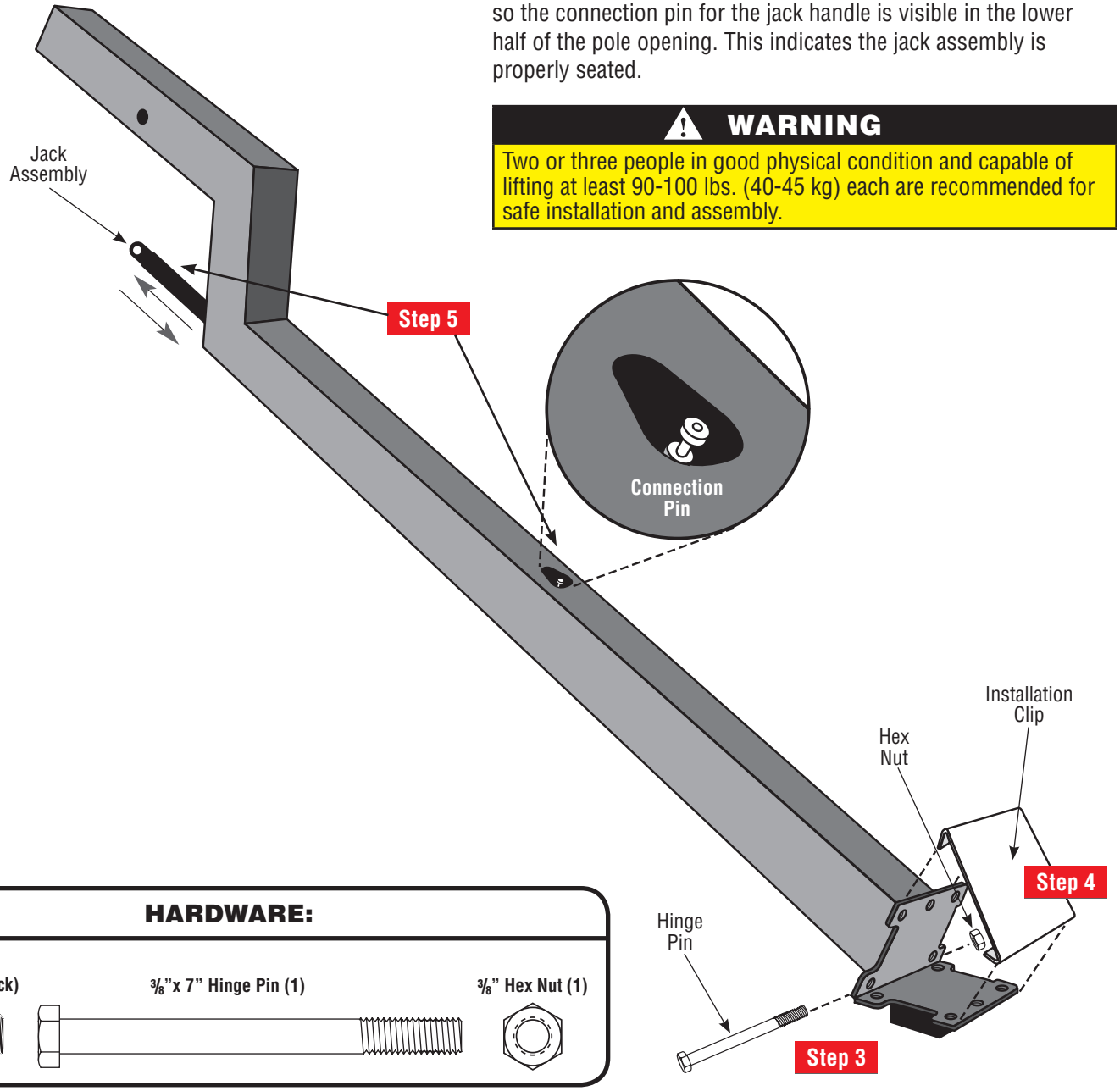

HARDWARE:

Extension Arm Attachments

WARNING

Two or three people in good physical condition and capable of lifting at least 90-100 lbs. (40-45 kg) each are recommended for safe installation and assembly.

TIME OUT TIP: The lower extension arm says "Best in Basketball" and the upper extension arm says "Goalsetter.com".

Step 1: Unpack extension arms. Position lower extension arm with jack mount clevis toward pole offset. Align lower extension arm pivot holes with lower holes in pole.

Step 2: Attach lower extension arm pivot holes with lower bushing on pole using the following: one extension arm pin and two lock collars. Tighten with 5/32" hex key (provided) so the bushings on extension arm meet the bushing on the pole. Do not over-tighten.

TIME OUT TIP: You may have to adjust jack to align jack pin holes with holes in the lower extension arms. A rubber mallet may be needed to drive pins into holes.

Step 3: Attach upper mount of jack to lower extension arm using the following: one jack pivot pin, two nylon washers, two fender washers and two socket screws. Tighten with 5/32" hex key (provided). ***NOTE:*** **DO NOT** over-tighten. Snug tighten only.

Step 4: Attach upper extension arm pivot holes with upper bushing on pole following the same hardware and procedure as in Step 2.

Step 5: Remove protective material from extension arms.

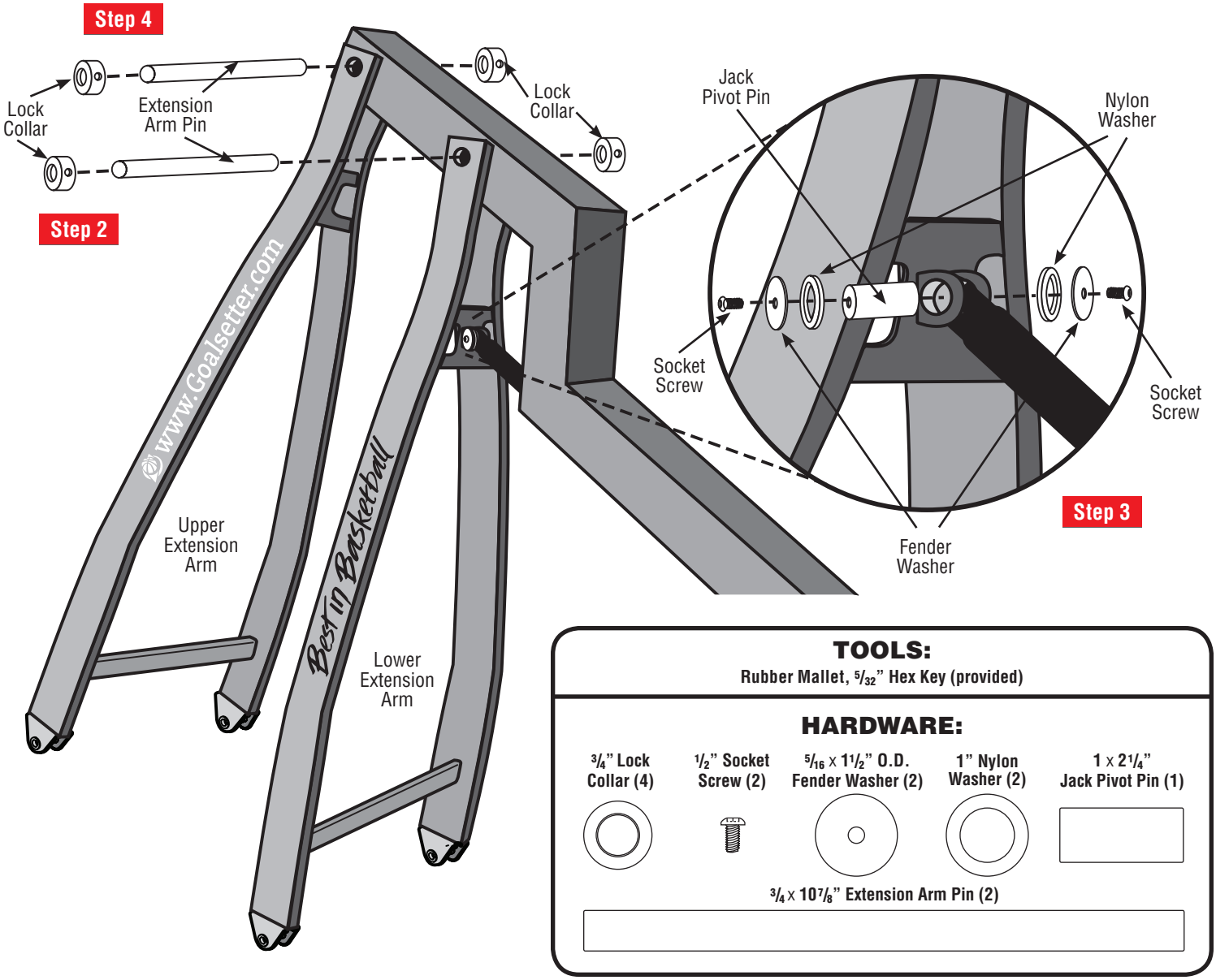

Backboard Attachment

⚠ WARNING

Two or three people in good physical condition and capable of lifting at least 90-100 lbs. (40-45 kg) each are recommended for safe installation and assembly.

IMPORTANT

The installation clip **MUST** be in place to maintain the proper installation angle.

TIME OUT TIP: Lay the unopened box upside down AND let the lid open up and fold away from the goal system.

Step 1: Open lid of box containing backboard and slide the backboard face down under lower extension arm, with rim mounting plate facing towards goal system.

TIME OUT TIP: The backboard attachment can be eased by cranking the jack to help align lower extension arms above the backboard prior to lifting it.

Step 2: Carefully lift the bottom of the backboard to align lower backboard holes with lower extension arm holes. Using ratchet and wrench, attach backboard to arm using the following hardware: two backboard bolts, four flat washers and two locknuts. ***NOTE:*** This is a pivot point! **DO NOT** over-tighten. Snug tighten only.

Step 3: Lift top of backboard to align upper holes with upper extension arm holes using the same hardware and procedure as in Step 2.

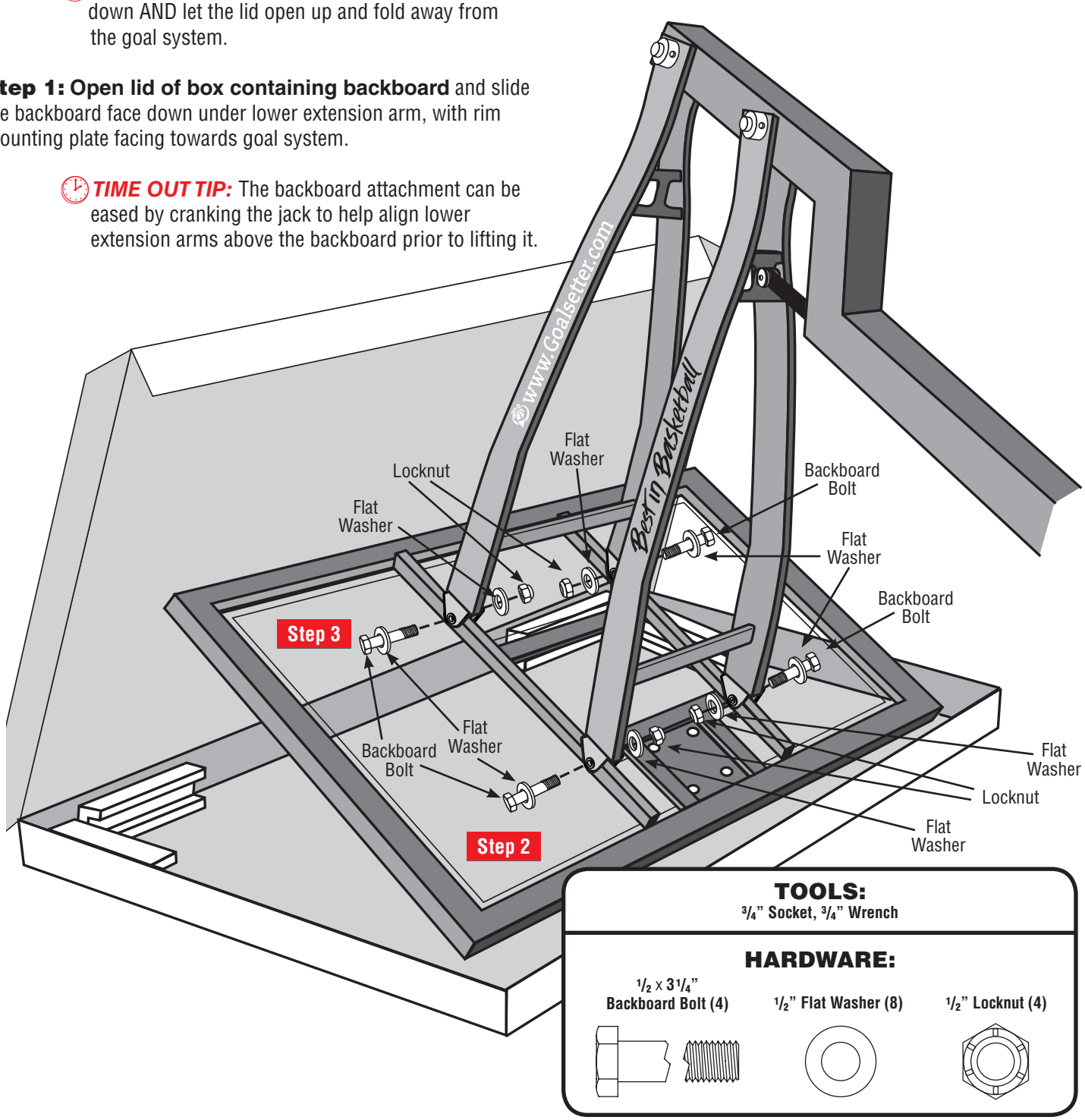

Goal Alignment

WARNING

For safe assembly, do the following:

- Use two or three people to raise goal assembly and hold it in a vertical position. Two or three people in good physical condition and capable of lifting at least 90-100 lbs. (40-45 kg) each are recommended for safe installation and assembly.
- **DO NOT** adjust height of backboard or attach rim until pole is raised and appropriately bolted.
- Correct sequence of hardware installation **MUST** be followed during assembly.

To avoid injury, keep fingers and toes away from the ground plate while raising the goal assembly to the vertical position.

TIME OUT TIP: Set screws are included in bag with jack handle; open cautiously to avoid loss of screws. For ease of installation, start set screws in jack handle before inserting jack handle.

Step 1: Insert jack handle through access hole and slide onto shaft.

Step 2: Attach handle to shaft using both set screws; tighten with 5/64" hex key (provided.)

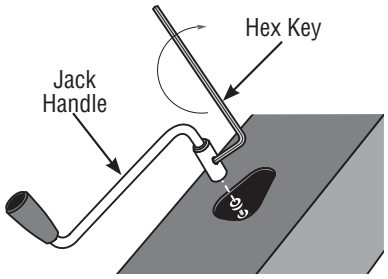

Step 3: Remove banding and edge protection from backboard. Peel back TOP 1/3 of protective sheeting from the backboard. This will allow you to reach the sheeting once the goal has been raised, yet protects the surface of the backboard during installation.

Step 4: Locate five anchor bolts. Prepare them for use by having lock washers slipped on and placed near ground anchor.

Step 5: Using <u>at least two people</u>, carefully push up on backboard to raise goal assembly to vertical position. The installation clip will fall away. Save installation clip for future disassembly.

Step 5

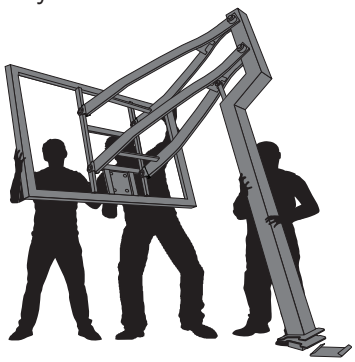

Step 6: Fasten pole to threaded ground anchor plate by installing and hand tightening the three rear anchor bolts with lock washers.

Step 7: Fasten pole to threaded ground anchor plate by installing and hand tightening the two front anchor bolts with lock washers.

TIME OUT TIP: Install rear three anchor bolts first and then the front two anchor bolts.

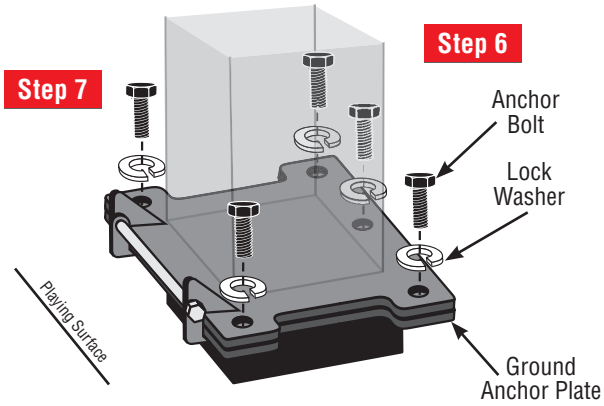

Step 8: Snug tighten the five anchor bolts, then check goal assembly with a level and inspect visually to determine if it is parallel and plumb to the playing surface.

Step 9: If adjustments are necessary, slightly loosen bolts to rotate goal.

Step 10: Fully tighten five bolts using a ¾" socket with a torque wrench. The torque wrench is to be set at 75 ft/lb on dry threads and 55 ft/lb on lubricated threads. ***NOTE:*** The anchor plate is threaded, so there is no need to use nuts on bolts.

IMPORTANT

The bolts must pass all the way through the ground anchor plate. If they do not pass through the ground anchor plate when fully tightened, **STOP** installation, contact Goalsetter Systems, Inc. and **DO NOT** allow play.

End of anchor bolt should extend 1/8" below anchor plate.

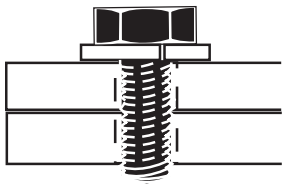

TOOLS:

3/4" Socket, 1/2" Drive Torque Wrench, Level, 5/64" Hex Key (provided)

HARDWARE:

8-32 Set Screw (2)	1/2 x 1 1/4" Anchor Bolt (5-black)	1/2" Lock Washer (5)

Rim Attachment

NOTE: Use all steps of the following instructions to install a reflex rim. To install a static rim, follow all steps *except* Steps 2 and 6.

TIME OUT TIP: Your warranty card is located behind protective sheeting. You **MUST** fill out and return this card to activate your warranty.

Step 1: Unpack rim. Remove any remaining cardboard edge protectors and protective sheeting from backboard.

IMPORTANT

- Four bushings are factory installed on the backboard. If loose, make sure to have them seated properly when tightening rim bolts. If missing, contact Goalsetter or dealer. **DO NOT install rim without bushings. If the bushings are not in place, glass backboards can shatter and acrylic backboards can crack!**
- Correct sequence of hardware installation **MUST** be followed during assembly.

Step 2: If not already removed, remove cover plate screws and cover plate from rim assembly.

Step 3: Starting with the top two mounting holes, loosely attach rim to backboard following the hardware sequence as shown in the illustration below. Snug tighten hardware - a 9/16" open-end wrench may be necessary.

Step 4: Repeat hardware sequence outlined in Step 3 for lower rim mounting holes.

Step 5: Level rim side to side and then fully tighten hardware.

Step 6: Position cover plate and attach with cover plate screws.

Step 7: Attach net to rim.

TIME OUT TIP: Level rim side to side before tightening backboard bolts.

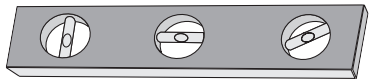

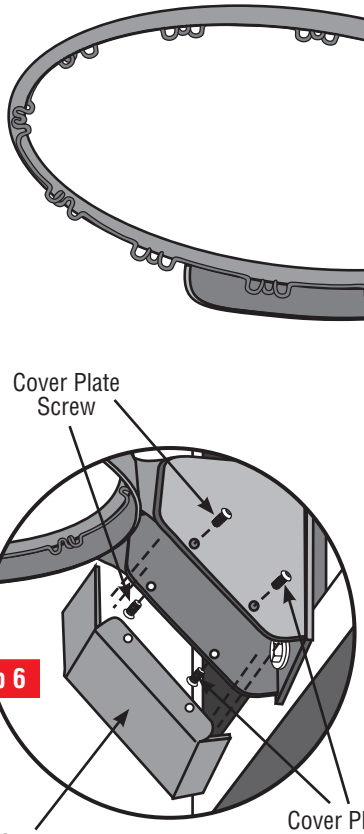

TOOLS:
Level, 9/16" Wrench, 9/16" Socket, Phillips Screwdriver

HARDWARE:

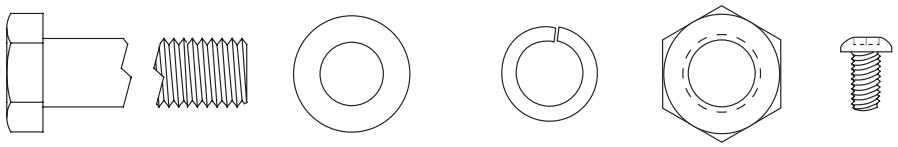

Height Indicator Adjustment

Step 1: Using a tape measure to ensure accuracy, turn the jack handle until the rim is 6' above the playing surface.

Step 2: Insert height decal with printed number '6' through indicator hole in pole and attach to internal height indicator plate in center of hole.

Step 3: Repeat steps for 6½', 7', 7½', 8', 8½', 9', 9½', and 10' rim heights; attach appropriate numbered decal.

Step 4: Install plastic grommet into indicator hole.

Step 5: Attach DOWN/UP decal to pole above crank handle hole. ("DOWN" will be on the left side)

⚠ WARNING

To avoid possible damage to the height adjustment mechanism:

- Do not adjust the rim height above 10 ft.
- Do not adjust the rim height below 6 ft.

Failure to do so could result in voiding the lifetime warranty.

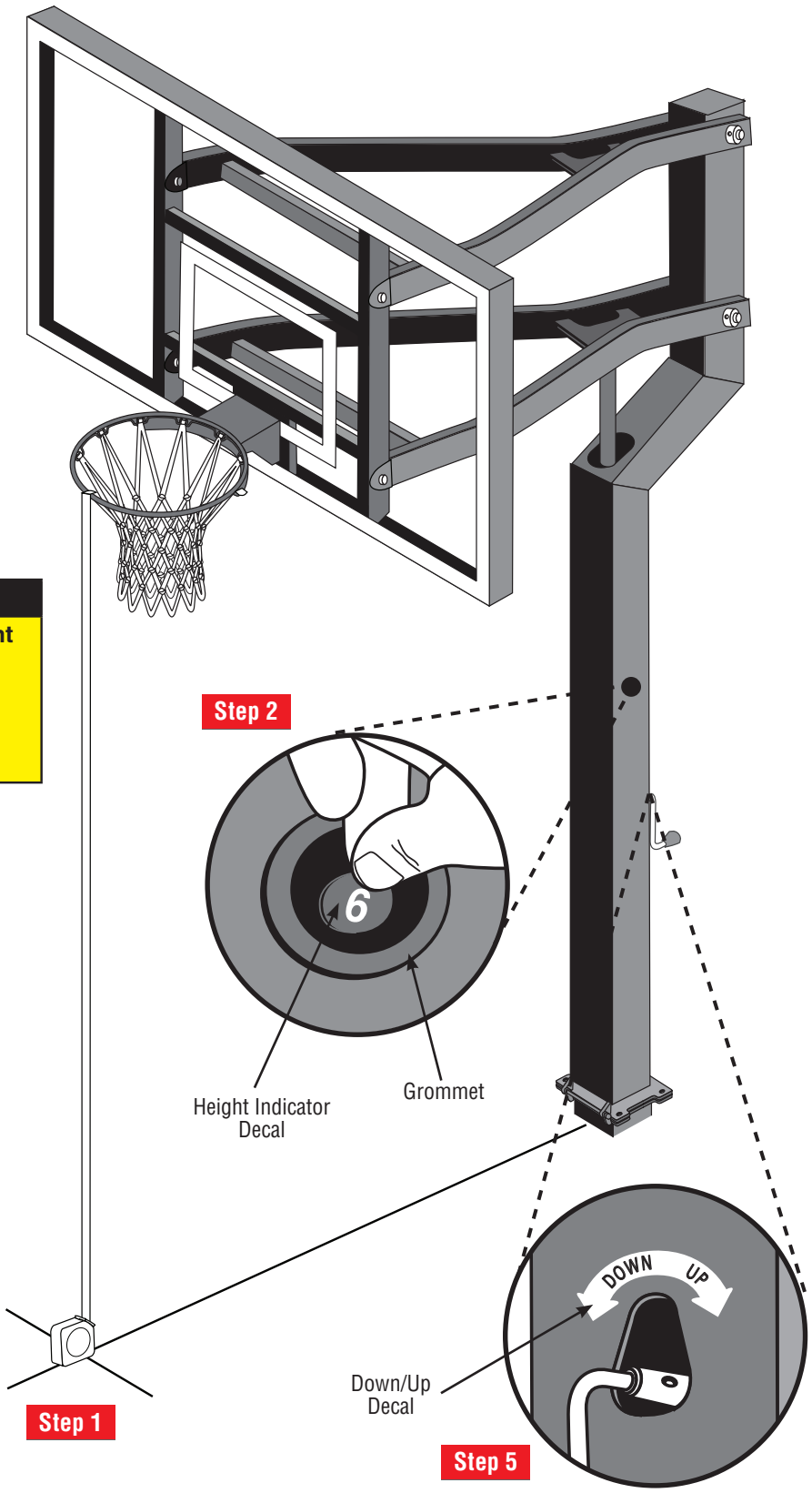

TOOLS:
12' Tape Measure

DECAL:

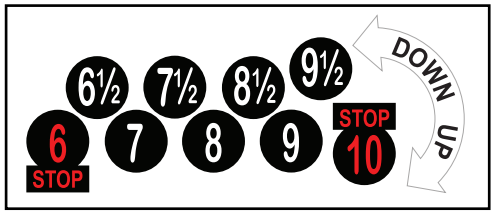

Ready to Play

Operation

Crank – Turn clockwise for goal to go up, turn counter clockwise for goal to go down.

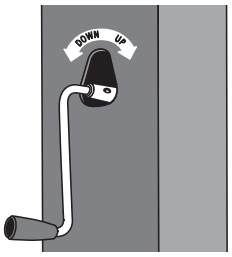

WARNING

DO NOT raise above 10 ft. or lower below 6 ft.

Pinlock (option; order through Goalsetter Systems, Inc. or your Goalsetter Dealer) Remove handle and push lock onto jack handle shaft. Use key to remove.

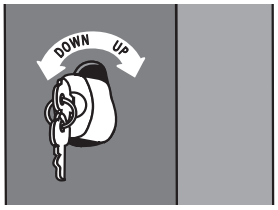

Height Indicator indicates goal height from 6' to 10'.

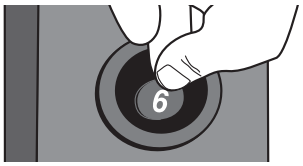

Maintenance

The life of your basketball goal system depends on many variables. The climate, exposure to corrosives such as salt, organic materials, pesticides, or herbicides, and excessive use or misuse can all contribute to failure of the goal system, which may cause property damage or personal injury. Before each use, check the goal system for loose hardware, excessive wear, abuse, or vandalism or signs of rust or corrosion.

For safety reasons, and to prolong the life of your basketball system, you must take the following preventative measures:

- Check all nuts and bolts. Inspect the threads and replace if necessary. If any are loose, tighten them.
- Check all parts for excessive wear and tear. If necessary, replace any parts that have been worn or damaged through usage.
- Check all sections of the goal system for visible rust or chipped or cracked paint, and if present, repair appropriately. See Paint Touch-Up on this page.

IF RUST OR CORROSION HAS PENETRATED ANY COMPONENT, DO NOT ALLOW PLAY ON THE GOAL AND REPLACE PARTS IMMEDIATELY.

- Contact Goalsetter Systems, Inc. for replacement parts. Only use parts provided by Goalsetter Systems, Inc. Use of other parts (a) may cause the goal system to fail, (b) could result in death, serious injury or property damage, and (c) will void the warranty.
- Inspect the Warning Sticker on the pole. If it is ripped, faded, or illegible, contact Goalsetter Systems, Inc. to request a replacement Warning Sticker.

Cleaning

The exterior finish of your Goalsetter® goal is designed for outdoor environments and should only require periodic cleaning and inspection for imperfections that could develop over time.

When cleaning is necessary, Goalsetter Systems, Inc. recommends using water and a mild dish detergent applied with a soft, non-abrasive cloth.

IMPORTANT

DO NOT use abrasive cleaners to clean the goal. Damage to the finish may result.

Paint Touch-Up

Goalsetter Systems, Inc. uses a two-part acrylic-enamel paint on the goals. With periodic inspection and service when needed, the high-gloss finish is designed to last for many years. A small bottle of black paint with brush is provided in the hardware kit for touch up of imperfections as they develop. If more touch up is required, please contact Goalsetter Systems, Inc. or your local Goalsetter Dealer.

Lubrication

The jack is pre-lubricated. As with any mechanical component, periodic inspection and service is required. Goalsetter Systems, Inc. recommends applying lubrication each spring and fall to keep a smooth operation of the height actuator. Failure to do so could result in jack failure and not be covered under warranty. There are two lubrication service points provided.

IMPORTANT

DO NOT use a penetrating oil (i.e. WD40.)

Step 1 Jack Assembly

Use a liberal amount of general-purpose lubricating oil such as a 3-in-1 household oil or a light motor oil.

Step 1

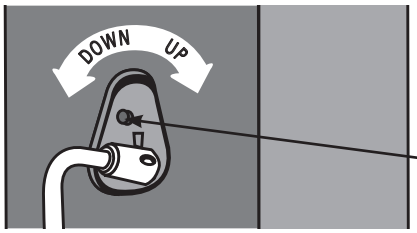

Step 2 Use a liberal amount of general-purpose lubricating oil such as a 3-in-1 household oil or a light motor oil.

Step 2

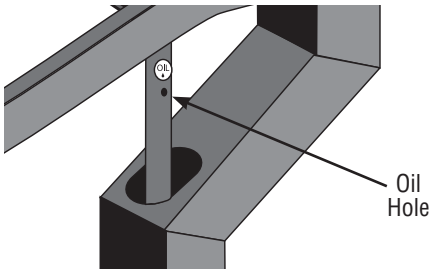

Warranties

IMPORTANT

Enclosed underneath the protective sheeting on your backboard is a warranty registration card. **YOU MUST FILL OUT AND MAIL IN THIS CARD IN ORDER TO HAVE A VALID WARRANTY.** You may also fill out a warranty registration online at www.goalsetter.com.

LIMITED WARRANTY

LIMITED LIFETIME WARRANTY: Subject to proper installation and normal, intended use, and subject to the limitations set forth below, Goalsetter Systems, Inc. warrants to the original retail purchaser that all structural components of Goalsetter Systems™ Signature Series*, Extreme Series** and GS Wall Mount Series*** basketball systems are free of defects in material and workmanship for the duration of ownership by such original retail purchaser or five (5) years after discontinuation of the product by Goalsetter Systems, Inc..

*Signature Series – MVP, Captain, All-American, All-Star, Contender, Champion;
**Extreme Series – X672, X660, X560, X554, X454, X448;
***GS Wall Mount Series – GS72 Wall Mount, GS60 Wall Mount, GS54 Wall Mount, GS48 Wall Mount

LIMITED WARRANTY: Subject to proper installation and normal, intended use, and subject to the limitations set forth below, Goalsetter Systems, Inc. warrants to the original retail purchaser that all structural components of (a) Goalsetter Systems™ Tournament Series Elite Plus and GS Baseline Wall Mount Series* basketball systems are free of defects in material and workmanship for a time period of five (5) years from date of purchase (b) Goalsetter Systems™ Junior MVP and GS Junior Wall Mount basketball systems are covered for a time period of two (2) years from date of purchase.

*GS Baseline Wall Mount Series – GS72 Baseline, GS60 Baseline, GS54 Baseline

Any warranty on a basketball system excludes the rim. Rim warranties are as follows: Rims shall be free from defects in materials and workmanship from the date of purchase as follows: R10126 Single Ring Static Rim: one (1) year limited warranty; R10226 Double Ring Static Rim: unconditional lifetime warranty; R10326 HD Breakaway Rim: two (2) year limited warranty; R10554 GS Collegiate Breakaway Rim: one (1) year limited warranty.

Padding Warranty: Padding shall be free from defects in materials and workmanship from the date of purchase as follows: Multi-Purpose Backboard Edge Padding: one-year limited warranty; Custom Fitted Pole Padding: one-year limited warranty; Wrap Around Pole Padding: one-year limited warranty.

The Limited Lifetime Warranty and the Limited Warranty shall cover damage or failure that occurs during the course of **NORMAL** or **INTENDED USE** of the product. Normal or intended use shall be described as activity that is necessary for the participation in the sport for which the equipment is designed. **NOT COVERED** is damage caused by deliberate hanging, multiple player hanging, vandalism, non-basketball activities or any other activity that could be regarded as abusive. Goalsetter Systems™ Junior MVP and GS Junior Wall Mount warranty voided if damage caused by the act of dunking.

A limited lifetime warranty is effective for the duration of ownership by the original retail purchaser or 5 years after discontinuation of the product by Goalsetter Systems, Inc.

Goalsetter Systems, Inc. shall have the right to require the purchaser to deliver at its expense the allegedly defective product to Goalsetter for testing, repair or replacement. Goalsetter shall not be responsible for any expenses associated with the replacement or removal of the product from its application for such delivery.

THE WARRANTY IS VOID IF THE PRODUCT HAS BEEN DAMAGED BY ACCIDENT, USE FOR PURPOSES FOR WHICH IT IS NOT INTENDED, AS THE RESULT OF IMPROPER INSTALLATION, FAILURE TO FOLLOW INSTALLATION, CARE OR MAINTENANCE INSTRUCTIONS PROVIDED WITH THE PRODUCT, USE OF PARTS NOT PROVIDED BY GOALSETTER SYSTEMS OR ANY MODIFICATION OF ANY PRODUCT BY THE CUSTOMER UNLESS APPROVED BY GOALSETTER SYSTEMS, INC., OR OTHER CAUSES NOT ARISING OUT OF DEFECTS IN MATERIALS OR WORKMANSHIP.

The sole obligation of Goalsetter Systems, Inc., and the exclusive remedy under the applicable warranty, is repair or replacement of any component part determined by Goalsetter Systems, Inc. to be defective and covered by the warranty. Goalsetter Systems, Inc. will not be liable for any other damages or expenses. The applicable warranty is expressly in lieu of all other warranties, express or implied. Goalsetter Systems, Inc. does not assume, and no other person or representative is authorized to assume for Goalsetter Systems, Inc. any other liability in connection with the sale of Goalsetter System™ products.

NOT COVERED BY WARRANTY

- Use in non-residential applications of Glass backboards on Signature Series systems.
- Use in non-residential applications of Extreme Series and Tournament Series complete systems.
- Any products subjected to abuse, negligence, improper installation, vandalism, acts of God, alteration of product and any other events beyond the control of Goalsetter Systems, Inc.
- Junior Series breakage caused by the act of dunking.
- Paint or rusted parts. Touch-up paint is included in all hardware kits.
- Deterioration of product due to time or wear and tear.

Normal deterioration of products due to atmospheric conditions, weather, wear and tear (including scratching or scuffing paint from normal use), or other causes that do not affect functional use are not covered by Goalsetter Systems, Inc. warranties. All warranties are valid only when product is used in the intended application & when installed according to Goalsetter Systems instructions. Warranty may be void if maintenance instructions in the Owner's Manual are not followed. If you did not receive an Owners Manual, please call 1-800-362-4625 and one will be mailed to you.

DISCLAIMERS: THE APPLICABLE WARRANTY IS EXPRESSLY IN LIEU OF ALL OTHER WARRANTIES, EXPRESS OR IMPLIED. AND ALL OTHER WARRANITES ARE HEREBY DISCLAIMED, INCLUDING BUT NOT LIMITED TO THE IMPLIED WARRANTIES OF MERCHANTABILITY AND FITNESS FOR A PARTICULAR PURPOSE. UNDER NO CIRCUMSTANCES SHALL GOALSETTER SYSTEMS, INC. BE LIABLE FOR ANY INDIRECT, CONSEQUENTIAL, SPECIAL, INCIDENTAL, PUNITIVE, OR EXEMPLARY DAMAGES OF ANY KIND.

THE PRODUCT IS INTENDED TO BE USED TO PLAY THE SPORT OF BASKETBALL. ALL SPORTS INVOLVE RISK OF INJURY. THE USER ASSUMES ALL RISK OF INJURY RESULTING FROM THE USE OF THIS PRODUCT. ALL PRODUCTS ARE SOLD ON THIS CONDITION AND NO REPRESENTATIVE OF THE COMPANY MAY WAIVE OR CHANGE THIS POLICY.

Some states do not allow the exclusion or limitation of implied warranties or consequential or incidental damages, so the above limitations or exclusions may not apply to you.

LEGAL REMEDIES: This warranty gives you specific legal rights, and you may also have other rights which may vary from state to state.

WARRANTY CLAIMS: All returns must be arranged through the Goalsetter Systems, Inc. dealer where the product was originally purchased. Warranties do not cover dealer service charges, labor charges, freight charges, and travel expenses associated with replacement, repair or removal of warranty items. Photos of the damaged product prior to any repair or clean-up actions must clearly show and permit analysis of the damaged product by Goalsetter Systems, Inc. A Goalsetter® Warranty Claim form must be completed, and photos submitted, together with proof of purchase, for any item you wish to claim under warranty. If the purchase was not made through a dealer, this form is available by email, fax or mail. In response to your claim, you will receive an order confirmation as well as a notice stating whether Goalsetter Systems, Inc. needs your warranty item returned. Goalsetter Systems, Inc. will notify you by fax or phone if we determine that the item cannot be claimed under warranty. **Goalsetter Systems, Inc. is not responsible for any charges for labor to install or repair defective product without prior authorization. Goalsetter Systems, Inc. will determine the most economical method to either repair or replace product before any work is to commence.**

Questions or Comments?
Phone 800.362.4625
Fax: 641.594.3343
Email:info@goalsetter.com
www.goalsetter.com

GOALSETTER® and GOALSETTER BASKETBALL logo are registered trademarks of Goalsetter Systems, Inc. in the United States. GOALSETTER SYSTEMS™ and BEST IN BASKETBALL™ are trademarks of Goalsetter Systems, Inc.

This product is covered by various U.S. and Canadian patents, including U.S. Patent #5,211,393. Patent infringement will be prosecuted.

No part of this manual may be reproduced in any form or by any means electronic or mechanical, including photocopying, recording, or by any information storage and retrieval systems without the express written consent of Goalsetter Systems, Inc.

Copyright 2006.
All rights reserved.
Revised 1/2015
GS IM3602

KOHLER. Faucets

Coralais®

Centerset Bathroom Sink Faucet

K-15597-F

Features

- One-piece, self-contained ceramic disc valve allows both volume and temperature control.
- Temperature memory allows faucet to be turned on and off at any temperature setting.
- High-temperature limit setting for added safety.
- Metal throat plate.
- 4-1/4â ³ (108 mm) spout reach.
- Stationary spout.
- Lever handle.
- Grid drain with tailpiece.
- Vandal-resistant aerator.
- Flexible connections.
- 0.5 gal/min (1.9 l/min) maximum flow rate [max at 60 psi (4.14 bar)].

Material

- Metal construction.

Optional Accessories

1160594 Large Spray Aerator 0.35 gpm (1.3 l/min)

ADA	CSA B651	OBC

Codes/Standards

ASME A112.18.1/CSA B125.1
NSF 61
NSF 372
DOE - Energy Policy Act 1992
ADA
ICC/ANSI A117.1
CSA B651
OBC
All applicable US Federal and State material regulations

KOHLER® One-Year Limited Warranty

See website for detailed warranty information.

Available Color/Finishes

Color tiles intended for reference only.

Color	Code	Description
	CP	Polished Chrome

KOHLER Faucets

Coralais®

Centerset Bathroom Sink Faucet

K-15597-F

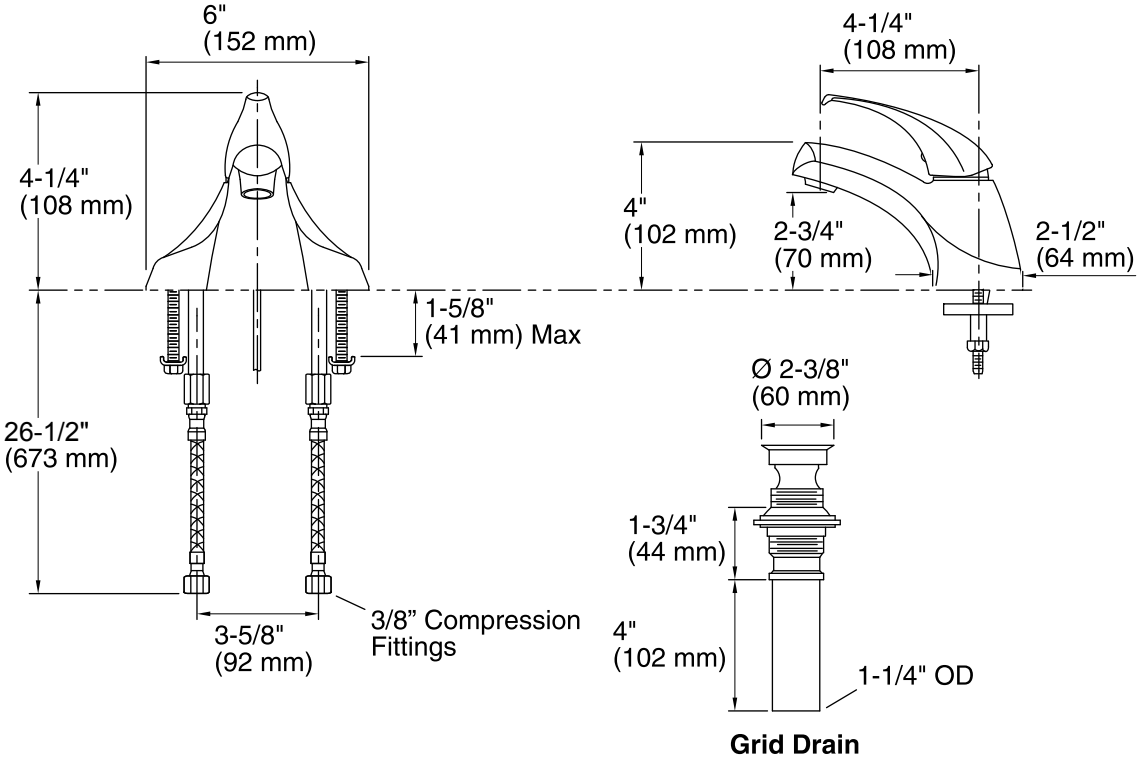

Technical Information

All product dimensions are nominal.

Spout reach:	4-1/4" (108 mm)
Drain included:	YES
Drain tailpiece included:	YES

Faucet:

Flow rate:	0.5 gal/min (1.9 l/min)
Pressure:	60 psi (4.1 bar)

Notes

Install this product according to the installation guide.

ADA, OBC, CSA B651 compliant when installed to the specific requirements of these regulations.